CountryLiving™

Owner's Manual & Installation Guide

24 Inch Infrared Electric Stove

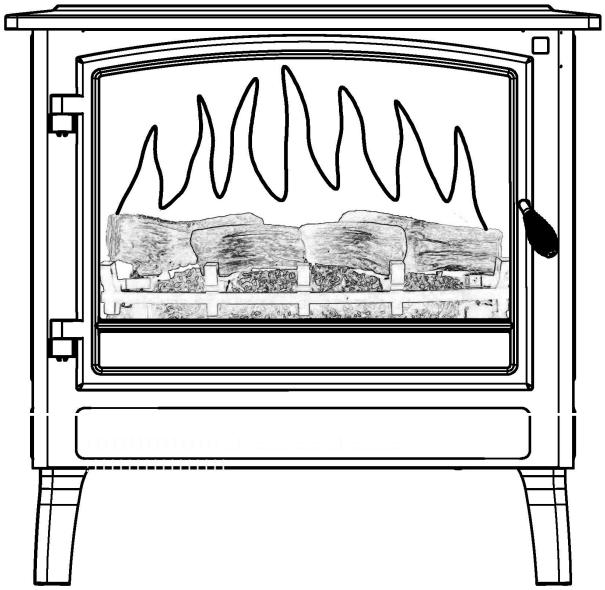

Models

CL-FS-696-0A · CL-FS-696-1A · CL-FS-696-2A ·
CL-FS-696-5 · CL-FS-696-6

⚠ **WARNING**	**Read and understand this entire owner's manual, including all safety information, before plugging in or using this product. Failure to do so could result in electric shock, or serious personal injury.**

⚠ **CAUTION**	**Keep this owner's manual for future reference. If you sell or give this product away, make sure this manual accompanies this product.**

CALL US FIRST DO NOT RETURN TO STORE

For immediate assistance with assembly, missing parts, or if your product arrives damaged, please contact us before returning to the retailer.

1-888-575-6968

Monday through Friday, 8am to 5pm CST

customercare@modernember.com | modernember.com

SAVE THESE INSTRUCTIONS FOR FUTURE USE

If you sell or give this product to another person, make sure this manual is included with it.

ATTENTION:

- Find the location for the electric stove that is protected from direct sunlight.
- Failure to read all instructions may result in a possible electric shock, fire hazard, and/or injury and will void Warranty.

WARNING:

- If the information in this manual is not followed, an electric shock or fire may result, causing property damage, personal injury, or loss of life.
- Do not store or use gasoline or other flammable vapors or liquids in the vicinity of this appliance.
- After completely reading instructions, confirm that all controls on the electric stove are in the OFF position. Plug the unit into a 15 amp, 120 volt outlet.

Package Contents

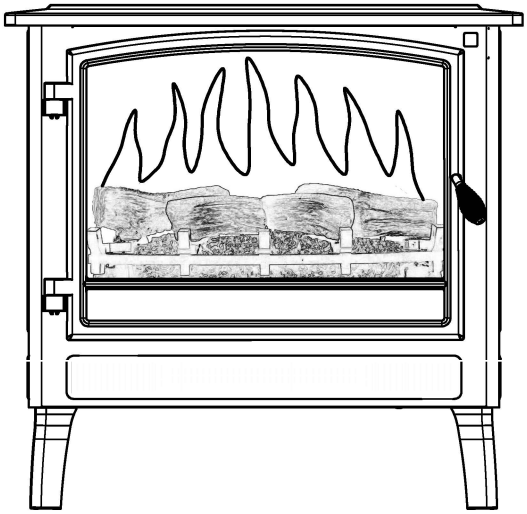

Electric stove

Remote

Assembly

Do not fully tighten screws during assembly. Only tighten when all parts are installed in place.

Parts list

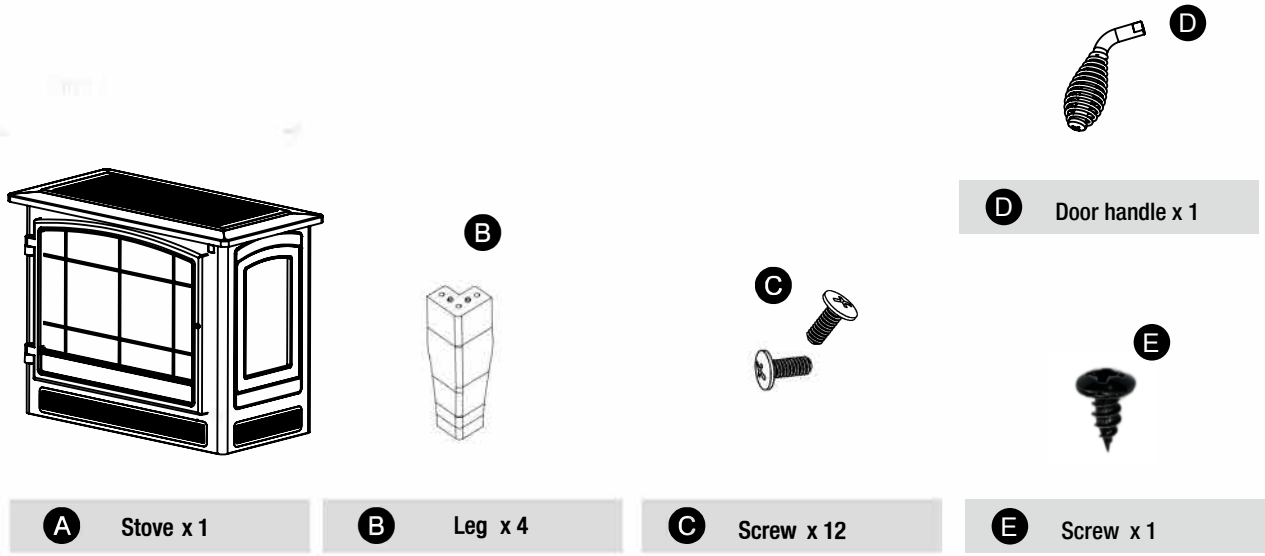

Assembly

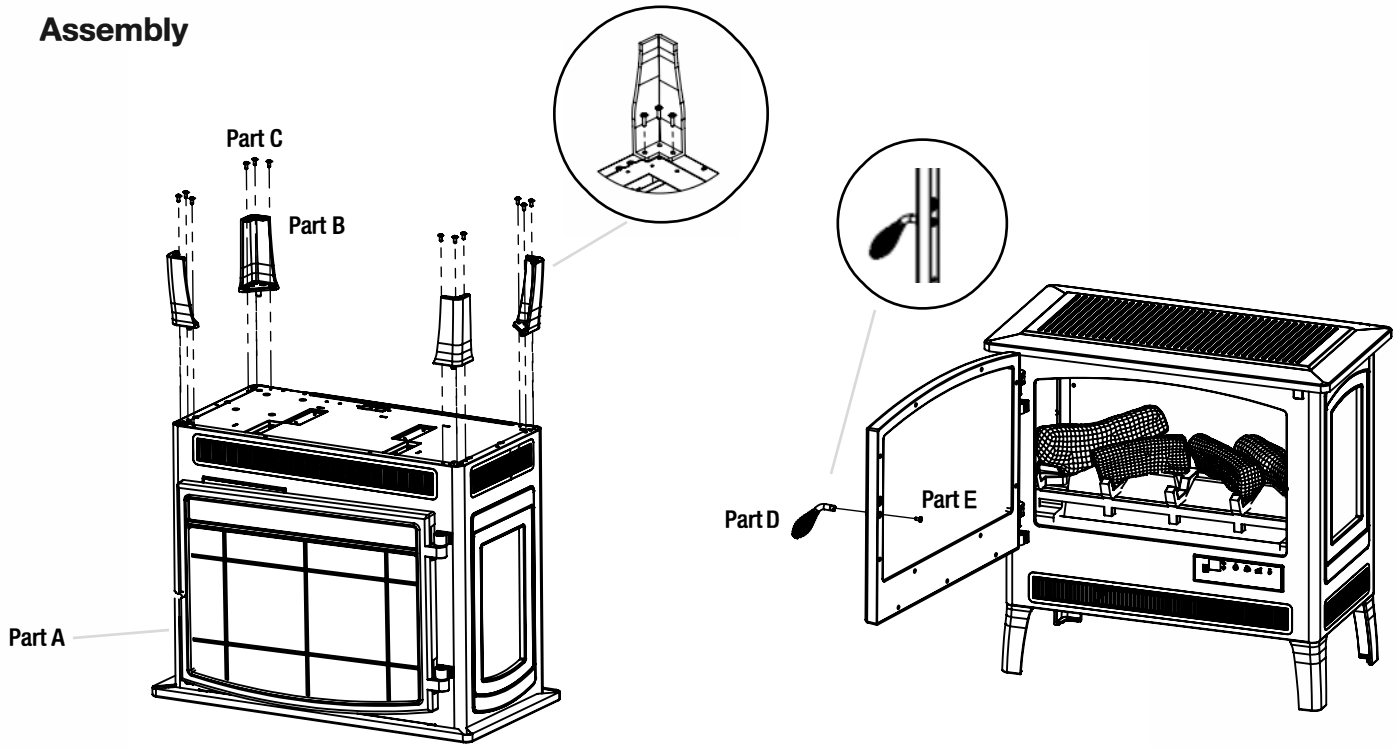

Assembly (continued)

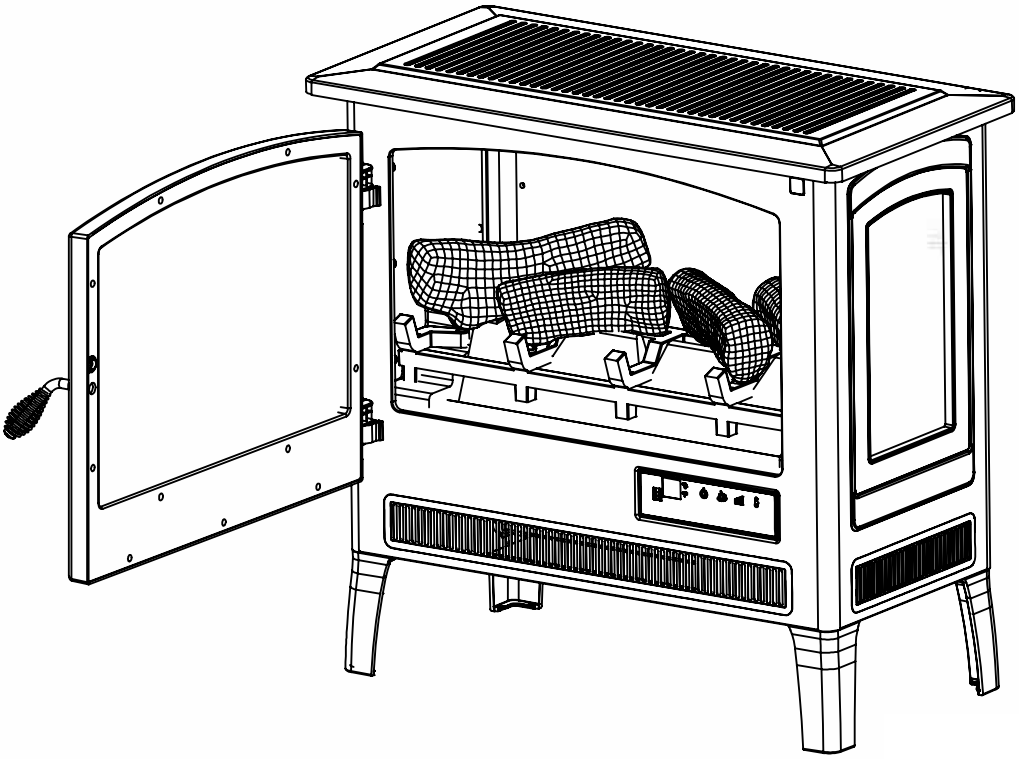

Important Safety Instructions

Please read and understand this entire manual before attempting to assemble, operate or install the product.

When using electrical appliances, basic precautions should always be followed to reduce the risk of fire, electrical shock, and injury to persons including the following:

1. Read all instructions before installing or using the heater.
2. To avoid injury from unexpected starting or electrical shock, DO NOT plug the power cord into a source of power during unpacking and assembly. The cord must remain unplugged whenever you are adjusting / assembling the item.
3. This appliance is hot when in use. To avoid burns, DO NOT let bare skin touch hot surfaces. Keep combustible materials, such as furniture, pillows, bedding, papers, clothes and curtains, at least 3 ft. (1 m) from the front of the heater and keep them away from the sides and rear.
4. Extreme caution is necessary when any heater is used by or near children or individuals with disabilities and whenever the fireplace is left operating and unattended.
5. ALWAYS unplug this appliance when not in use.
6. DO NOT operate any heater with a damaged cord or plug or after the heater malfunctions. DO NOT operate any heater if it has been dropped or damaged in any manner. Disconnect power at the service panel and have heater inspected by a reputable electrician before reusing. Discard heater or return to authorized service facility for examination and/or repair.
7. DO NOT use outdoors.
8. This heater is not intended for use in bathrooms, laundry areas and similar indoor locations. NEVER place heater where it may fall into a bathtub or other water container.
9. DO NOT run the cord under carpeting. DO NOT cover the cord with throw rugs, runners, or similar coverings. DO NOT route the cord under furniture or appliances. Arrange the cord away from traffic areas and where it will not be tripped over.
10. To disconnect this appliance, turn the controls to the OFF position and then remove the plug from the outlet.
11. ONLY connect to properly grounded outlets.
12. DO NOT insert or allow foreign objects to enter any ventilation or exhaust openings, as this may cause an electric shock or fire or damage the appliance.
13. To prevent possible fire, DO NOT block air intakes or exhaust in any manner. DO NOT use it on soft surfaces, like a bed, where opening may become blocked.
14. Use this appliance only as described in the manual. Any other use is NOT recommended by the manufacturer and may cause fire, electric shock, or injury to persons.
15. This appliance has hot and arcing or sparking parts inside. DO NOT use it in areas where gasoline, paint, or flammable vapors or liquids are used and stored. This fireplace should not be used as a drying rack for clothing, Christmas stockings or decorations should not be hung on the unit.
16. ALWAYS plug heaters directly into a wall outlet/receptacle. NEVER use with an extension cord or re-locatable power tap (outlet/power strip).
17. This appliance, when installed, must be electrically grounded in accordance with local codes, with the current CSA C22.1 Canadian Electrical Code (Canada), and/or with the National Electrical Code ANSI//NFPA NO. 70 (U.S.).

CAUTION: DO NOT place any objects on top of insert and top air intake vents, as this will cause unit to overheat and can cause a fire.

CAUTION: The heater MUST NOT be located immediately below a socket or outlet.

CAUTION: There is a thermostat protective device provided inside of the unit. If the inner temperature overheats or abnormal heating occurs, the thermostat protective device will cut off the power supply to prevent damage or risk of fire.

CAUTION: Any repairs to this fireplace should be carried out by a qualified service person.

CAUTION: If the information in this manual is not followed exactly, electric shock or fire may result, causing property damage, personal injury or loss of life.

CAUTION: Under no circumstances should this fireplace be modified. Parts having to be removed for servicing must be replaced prior to operating this fireplace again.

SAVE THESE INSTRUCTIONS

Warranty

1 Year Limited Warranty: The manufacturer warrants this product to be free from manufacturing and material defects for a period of one year from date of purchase, subject to the following conditions and limitations:

1. **Install and operate this Electric Fireplace in accordance with the installation and operating instructions furnished with the product at all times. Any unauthorized repair, alteration, willful abuse, accident, or misuse of the product shall nullify this warranty.**
2. **This warranty is non-transferable and is made to the original owner, provided that the purchase was made through an authorized supplier of the product.**
3. **The warranty is limited to the repair or replacement of part(s) found to be defective in material or workmanship, provided that such part(s) has (have) been subjected to normal conditions of use and service, after said defect is confirmed by the manufacturer's inspection.**
4. **The manufacturer may, at its discretion, fully discharge all obligations with respect to this warranty by refunding the wholesale price of the defective part(s).**
5. **Any installation, labor, construction, transportation, or other related costs/expenses arising from defective part(s), repair, replacement, or otherwise of same, will not be covered by this warranty, nor shall the manufacturer assume responsibility for same.**
6. **The owner/user assumes all other risks, if any, including the risk of any direct, indirect or consequential loss or damage arising out of the use or inability to use the product, except as provided by law.**
7. **All other warranties – expressed or implied – with respect to the product, its components and accessories, or any obligations/liabilities on the part of the manufacturer are hereby expressly excluded.**
8. **The manufacturer neither assumes nor authorizes any third party to assume on its behalf any other liabilities with respect to the sale of the product.**
9. **The warranties as outlined within this document do not apply to accessories not supplied by the manufacturer that are used in conjunction with the installation of this product.**
10. **This warranty gives you specific legal rights, and you may also have other rights which vary from state to state.**

This warranty is void if:

a. **The fireplace is subjected to prolonged periods of dampness or condensation.**
b. **There has been unauthorized alteration, willful abuse, accident, or misuse of the product.**
c. **You do not have the original receipt of purchase.**

Operation

PRODUCT SPECIFICATIONS

Voltage	120 VAC, 60 Hz
Amps	11.7 amps
Watts	1400 watts

Control Panel

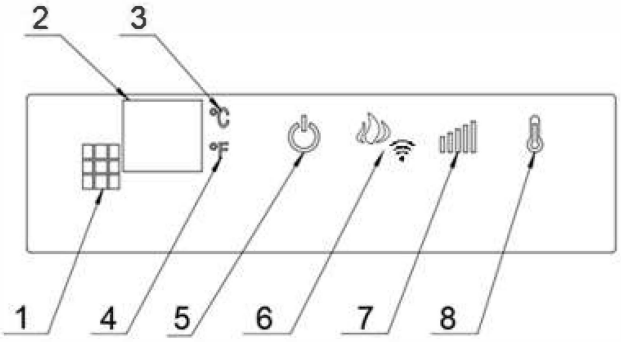

1. **Signal receiving area - Align the remote control transmitter with the reception window to improve remote control response.**
2. **Display screen - Displays current status. The screen will automatically turn off if not operated for more than 5 seconds.**
3. **Celsius temperature symbol indicator light - When this indicator light flashes, it indicates the temperature is in Celsius.**
4. **Fahrenheit temperature symbol indicator light - When this indicator light flashes, it indicates the temperature is in Fahrenheit.**
5. **Power - Turns the appliance on / off.**
6. **Flame color / WiFi function - Press this button to change the flame color. Press and hold this button to turn on the app function. Refer to page 9 for specific usage instructions.**
   The temperature control function will not be able to be used after 24 hours of no operation on the app. It can be activated by pressing any button on the control panel or remote control.
7. **Flame brightness - Press this button to change the flame brightness. There are 5 flame brightness settings: F5 (highest), F4, F3, F2, F1 (lowest), and OFF.**
8. **Temperature - Press this button to adjust the temperature. The temperature can be adjusted within the range of 5-37 degrees Celsius or 41-99 degrees Fahrenheit.**
   Press and hold this button to switch between Celsius and Fahrenheit states.

Operation (continued)

Remote Control

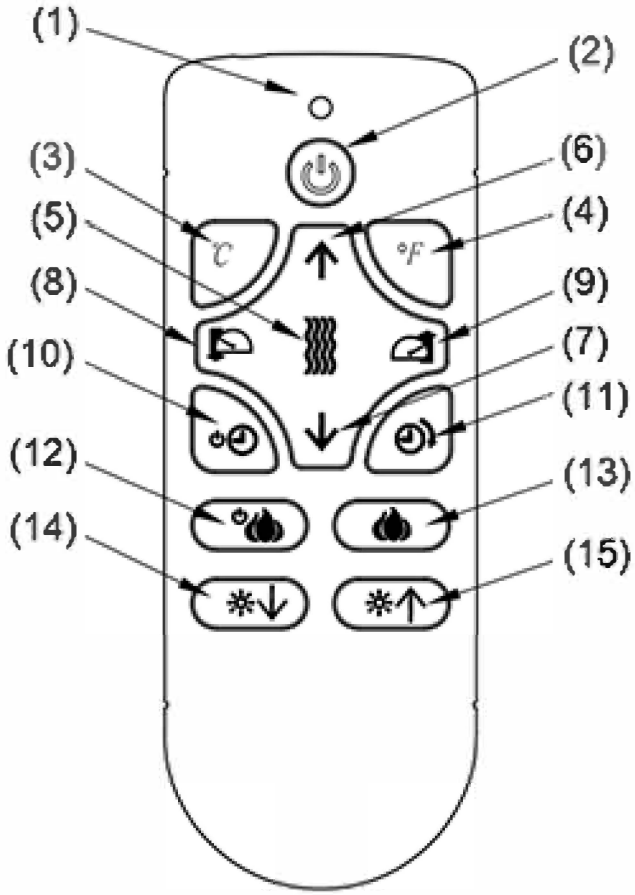

1. Indicator light - Signal transmission indication.
2. Power- Turns the appliance on/ off.
3. Celsius temperature - Press this button to change to the Celsius temperature state.
4. Fahrenheit temperature - Press this button to change to the Fahrenheit temperature state.
5. Heat - Turns the heat function on/ off.
6. Temperature increase - Press this button to increase the temperature.
7. Temperature decrease - Press this button to decrease the temperature.
8. Decrease flame speed - Press this button to decrease the flame speed. There are 5 flame speeds for your selection (F5, F4, F3, F2 and F1).

Operation (continued)

9. Increase flame speed - Press this button to increase the flame speed (F1-F2-F3-F4-F5).

10. Timer - Press this button to turn off the timer function.

11. Timer - Press this button to turn on the timer. Press again to select timing. There are 10 timing options (30min, 1H, 2H, 3H, 4H, 5H, 6H, 7H, 8H, and 9H).

12. Flame effect - Press this button to turn on/ off the flame effect.

13. Flame color - Press this button to change flame color.

14. Flame brightness decrease - Press this button to decrease the flame intensity.

15. Flame brightness increase - Press this button to increase the flame intensity.

TUYA SMART APP

Step 1: Search for "Tuya Smart" in the mobile app market and download it, or scan the QR code below to download.

Tuya Smart QR code

Step 2: After installing the Tuya Smart app, you will need to register the user.

Step 3: Press and hold the flame color / WiFi button until the indicator light starts to flash.

Step 4: Click the Add icon on the Tuya Smart app. The mobile phone will automatically match with the unit.

Step 5: Input the password of the current network environment to complete the network matching between the mobile phone and the heater.

Operation (continued)

Step 6: After matching, the indicator light will change from flashing to constantly on. The heater's icon will be displayed. Enter, and you can control your electric fireplace.

Press the power button, and the indicator light will turn on. Then you can select the following functions as desired. Press the power button again to turn off the heater.

+ - **You can press the + or - button to set the temperature. When the desired ambient temperature is reached, the heater will automatically turn off.**

You can open more features - heat, flame color, signal receiving window, flame brightness, timer, etc.

FCC/IC Information

Please read and understand this entire manual before attempting to assemble, operate or install the product.

This equipment has been tested and found to comply with the limits for Class B digital devices, pursuant to part 15 of the FCC rules. These limits are designed to provide reasonable protection against harmful interference in a residential installation. The equipment generates, uses and can radiate radio frequency energy and, if not installed and used in accordance with the instructions, may cause harmful interference to radio or television reception, which can be determined by turning the equipment off and on. The user is encouraged to try and correct the interference by one or more of the following measures:

- Reorient or relocate the receiving antenna.
- Increase the separation between the equipment and the receiver.
- Connect the equipment into an outlet on a circuit different from that to which the receiver is connected.
- Consult the dealer or an experienced radio/TV technician for help.

This device complies with Part 15 of the FCC rules. Operation is subject to the following two conditions:

1. This device may not cause harmful interference, and
2. This device must accept any interference received, including interference that may cause undesired operation.

Modifications not approved by the party responsible for compliance could void user's authority to operate the equipment.

This Class B digital apparatus complies with Canadian ICES-003.

Care and Maintenance

- Make sure the unit is turned OFF and is unplugged, and the heating elements of heater are cool whenever you are cleaning the heater.
- Clean the metal trim using a water-dampened soft, clean cloth. DO NOT use brass polish or household cleaners, as these products will damage the metal trim.
- The motors used on the fan and the flame generator assembly are pre-lubricated for extended bearing life and require no further lubrication. However, periodic cleaning/vacuuming of the fan/heater and air intake/output vents is recommended.
- Any other servicing should be performed by an authorized service representative.

WARNING: Make sure the power is turned off before proceeding. Any electrical repairs or rewiring of this unit should be carried out by a licensed electrician in accordance with national and local codes.

WARNING: If repairing or replacing an electrical component or wiring, the original wire routing, color coding and securing locations must be followed.

WARNING: Electrical outlet wiring must comply with local building codes and other applicable regulations to reduce the risk of fire, electrical shock and injury to persons.

WARNING: Do not use this fireplace if any part of it has been under water. Immediately call a qualified service technician to inspect the fireplace and replace any part of the electrical system.

NOTE: When the heater is not in use, the heater should be stored in a dry location, away from possible damage. The power cord should be stored properly to avoid contact with hot or sharp objects.

WARNING: Disconnect power before attempting any maintenance or cleaning to reduce the risk of fire, electrical shock or personal injury.

WARNING: During any service of this appliance, the power to the unit must be turned off. First turn the main power switch to the “OFF” position. Then remove the electrical plug from the wall outlet.

Replacing the Remote Control Batteries

When the remote control stops operating or its range seems reduced, it is time to replace the batteries.

1. Locate the battery compartment on the back end of the remote control.
2. Slide the battery door open and remove the old batteries.
3. Insert 2 AAA batteries.
4. Do not mix old and new batteries; do not mix alkaline, standard (carbon-zinc), or rechargeable (ni-cad, ni-mh, etc) batteries.
5. Re-insert the battery door.

NOTE: The batteries should be removed if the product is to be left unused for a long time.

CAUTION: Do not attempt to recharge a non-rechargeable battery. Remove the exhausted battery from the product.

Disposal of Used Batteries

A battery may contain hazardous substances that could endanger the environment and human health.

- **This symbol marked on the battery and/or packaging indicates that a used battery shall not be treated as municipal waste. Instead, it shall be left at the appropriate collection point for recycling.**
- **By ensuring the used battery is disposed of correctly, you will help prevent potential negative consequences for the environment and human health. The recycling of materials will help to conserve natural resources.**

For more information about collection and recycling of used batteries, please contact your local municipality, your waste disposal service or the point of sale where you purchased this item.

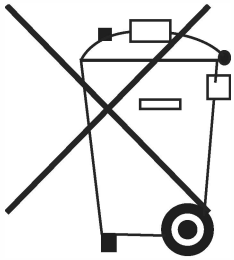

Troubleshooting

Problem	Possible cause	Solution
No power. Logs do not glow.	The unit does not have power.	Check that unit is plugged into a standard 120 V outlet. Then make sure power is set at “ON” position.
E1 displayed on control panel with beep sound.	The overheat sensor has been engaged.	Unplug unit, wait 5-10 minutes, and then the sensor will reset itself. Plug the unit back in and turn on the heater. If the problem persists, call customer service.
E2 displayed on control panel.	The ambient temperature sensor is broken or not working correctly.	Unplug unit, wait 5-10 minutes, and then the sensor will reset itself. Plug the unit back in and turn on the heater. If the problem persists, call customer service.
E3 displayed on control panel.	The mobile protection device triggered.	Turn the power off and back on to restore normal operation.
Fan motor continues to blow after unit is powered off.	Normal operation.	This is a standard feature; the blower runs for an additional 20 seconds to ensure heat will not be trapped inside the unit.
Power cord gets warm to the touch.	Normal operation.	This is normal for a heater appliance as it requires more current to operate. Check the connections of the appliance cord and the outlet. Make sure the plug fits tightly into the outlet. During use, check the plug and outlet frequently to determine if it is HOT; if so, discontinue use of the appliance and consult with a qualified electrician to check or change the overheating outlet(s).

CountryLiving™

Thank you for your purchase.

Each unit has been manufactured to ensure safety and reliability. Before first use, read the instructions carefully and keep them for further reference.

Questions, problems, missing parts?
Before returning to store, call Customer Service:

8am-5pm CST, Monday - Friday

Phone: 1-888-575-6968
Email: customercare@modernember.com

Retain this manual for future use.

Don't forget to tag us!
@countrylivingmag